(1)

CLASS B
NOTES
MYSORE GOVERNMENT SECRETARIAT

File No. AFD 18 FAF 61.

Department of Agriculture & Forest Department.

Section Forests.

Subject : S. No. 269 & 308 of Airani Village
Tk Ranebennur - DFT 7.

References :

Date	To whom sent	Notes and instructions
		FOR/NOT FOR NOTE BOOK UNDER SECRETARY Under Secretary to Govt.

Fwd
21/2/62
28/2/62

ವಿಭಾಗಾಧಿಕಾರಿಗಳು -
ಸರ್ಕಾರದ ಅಧೀನ ಕಾರ್ಯದರ್ಶಿ,
ಅರಣ್ಯ, ಪರಿಶ್ರಮ ಮತ್ತು ಬೀಜ
ಶಾಸ್ತ್ರ ಇಲಾಖೆ (ಅರಣ್ಯ-ಬಿ)

Sub:- Request for disforestment of Lands Granted on Inforest Settlement System out of Forest Nos. 269 and 308 of Airani Village, Ranebennur

Mysore Government Secretariat

Dy. No. 1401/61 File No. AFD 18 F/Prof 1961.

[App. F. 111 2 Fy.

Serial No.	
	Letter No. B3-4Ld-1775/60-61 D/14.2.61 from the CCF. Bangalore.
1	The CCF. States in his letter D/14.2.61 that Sri Bettappa Fakirappa Giddappalavar & Sri Bettappa Bangarappa Doddatammanavar -avar were granted 10 acres and 15-acres of land under Inforest Settlement System out of Forest Survey Nos. 269 & 308 of Airani Village of Ranebennur Taluka. It is Said that these two grantees are requesting that the land be permanently granted to them for Cultivation purposes by disforesting the area in question. The grounds for the request are set out in para 4 of the DFO's report on Page 5 CF. It is also reported that the area in question will not be required for departmental activities in future & that the areas are adjacent to Malki lands. The CCF recommends that the land be disforested and granted to the present grantees permanently as a special case.
2	For orders.

Agreement for Inforest Settlement Hirekerur Range is Placed below.

MYSORE GOVERNMENT SECRETARIAT REVENUE 25 FEB 1961 2373

MYSORE GOVERNMENT No. 369 24 FEB REVENUE

2) 7.7.0. Commissioner

RD/ 22/2/61

21/2/61

Note.—Contn. Sheet

File No. RD 28 LBM 61 of 196 .

Mysore Government Secretariat

Serial No.	
3	A Copy of the letter from the C.C.F may be Sent to the Dy. Comsn, Dharwar for his Remarks in the first instance.
4	Draft letter is put up for approval MR 27/2/61 Sd 28/2 Sd 2 28/2 Issued MR 6/3 Issued the reminder No 28 LBM 61 dated 1.6.61 to DC Dharwar RV 24/10/61
	Issued the reminder No 28 LBM 61 dt 20/12/61 to the DC Dharwar RV 20/12
5	Draft D.O. Reminder is put up for approval MR 3/2/62 Sd 2 3/2 Issued the D.O.R. No 28 LBM 61 dt 6/2/62 to the DC Belgaum Sd 6/2

WD 07217—GPB—PZS—8.00,000—196

Lands dept of Forest S.Nos. 269 and 308 of Ainani Village – Reclebenur Tal. Dis. Dereservation of

Mysore Government Secretariat

File No. RD 28 LOM of 1961.

[App. F. III 2

Serial No.	
	D.O. Letter No. RB/FOR-1853 dt. the 16th Feb. 1962 from the D.C. Belgaum.
6	A copy of this D.O. letter may be sent to the D.C. Dharwar and he may be requested to send the report early. Draft D.O. letter is put up for approval.
	22/2/62 — 20 — 27/2/62
	Issued vide D.O. Letter No 28 RBM 61 dt 28/2/62 to The D C Dharwar
7	Draft D.O. Reminder is put up for approval
	12/3/62
8	Issued vide D.O. R. No 28 RBM 61 dt 17/4/62 to The DC Dharwar.
9	E. Letter No. For. SR. 1192 dt. 11-4-1962 from the Dist. Comm., Belgaum.
10	Submitted w.r.t. para 1/Ante.
11	The D.C. Dharwar & the Dist. Comms. Belgaum do have no objection for dereservation of land in favour of the applicants. R.D may agree with the Dist. Comms. Belgaum do. These pps may be returned to A&F. Dept. after returning the connected records received from the Dist. comms.
12	Draft letter is put up for approval 19/4/62 — 21/4/62

Sri MCR
Pl. put up as it depends upon reminder to DC Dharwar
26/2/62

3521

Note.—Contn. Sheet

Lands out of S.Nos. dis forestant of lands grants on the forest Settlement System out of Forest S.Nos. 269 & 308 of Hiralli village.

(4)

File No. RD 28 LBM 61 of 196.

Mysore Government Secretariat

Serial No.

(2) Is the proposal in order

23/4

Issued this vide G.L.R. No 28 RB M62 on 26-4-62 G-
The Asst Commr. Belgaum Dis a/R.

RS

(3) This may be marked to AFT Dept with the opinion stated at para 11/Nf with reference to their Dept's note at para 2/Nf.

27/4/62

(4) R.D. agrees with the proposal of the CCF to dispose the land in question and grant the same to the applicants for cultivation permanently.

A. Asst) 27/4

(5) The RD has no objection for the release of an area of 10 Acres in S. No. 269 + 15-2-0 in S. No. 308 of Airani village in favour of the 2 (two) Applicants permanently.

Dy RD 27/4

27/4/62

GL

MYSORE GOVERNMENT SECRETARIAT NO. 3276 1 MAY 1962 FOREST BRANCH

WD 07213—CPB—P2S—8.00,000—1960

(5)

AFD 18 FAF 61

p.49c/7 Draft G.O. put up for approval.

CR
2/5/62

16) Draft G.O. may be approved.

JSR
5/5/62

~~D.S.~~)

17) ks 9/5/62.

~~M(Forestry)~~

18) Kept ready.

ks
13/5

Y. C. HOMBALAYYA,
Secretary to Government,
Agriculture & Forest Department.

19) ks 14/5

JSR
16/5/62

20) Resubmitted for orders whether the G.O. put up at p.49c/7 may be issued

(Reference to Para 18 of N.7.)

D.S.) JSR
31/5/62

CR
16/5/62 ks 17/5

Seey's orders are clear on the point. How can we issue the G.O. in the face of these orders.

ks
31/5

JR
31/5

Stopped
Please speak.
JSR
21/5/62

Stopped
JR
31/5/62

B
CR
29/5/62

DEPUTY SECRETARY TO GOVT.
NO. 1141-F
9 - MAY 1962
AGRICULTURE & FOREST DEPTT.

AGRICULTURE & FOREST SECRETARY
2176
9 MAY 1962
GOVERNMENT OF MYSORE

DEPUTY SECRETARY TO GOVT.
NO. 1291-F
31 MAY 1962
AGRICULTURE & FOREST DEPTT.

(6)

No.B3-414-1775/60-61
Enl one file.

Chief Conservator's Office,
Bangalore, dated 14- 2-1961.

To

The Secretary to Government,
Agriculture and Forest Department,
Bangalore.

Sir,

Sub:- Request for disforestment of lands granted on Inforest Settlement System out of Forest S.Nos.269 and 308 of Airani village, Taluka Ranebennur.

MYSORE GOVERNMENT SECRETARIAT
NO. 440/6
FEB
FOREST BRANCH

I enclose a copy of letter No.FOP/GFL/4480/861/60-61 dated 10-12-1960 from the Conservator of Forests, Belgaum along with the connected papers on the above subject for perusal.

An extent of 10 acres in S.No.269 and 15 acres 7 guntas in S.No.308 of Airani village have been granted on Inforest settlement to Sri Bettappa Fakirappa Giddappalavar and Sri Bettappa Bangareppa Doddatammannavar respectively. Now the applicants request to disforest the areas and to grant the same for cultivation permanently. In this connection they have stated that they have invested their entire amount to bring the areas under cultivation and that they want to further improve the lands by digging well for drinking water, to erect sheds for the accommodation of the cattle etc. They have further stated that they can raise loans for these purpose only if the lands are granted on a permanent basis. The Divisional Forest Officer, Dharwar has stated that the areas have become quite suitable for cultivation by the efforts of the grantees and will not be required by the Forest Department for its activities in future. In the circumstances and also in view of the fact that the areas are adjacent to the Malki lands, I have no objection to disforest these areas as a special case.

Orders of Government may kindly be issued early.

The connected papers may kindly be returned when done with.

Yours faithfully,

V. S. Kaikini

AS/9/2(3) Chief Conservator of Forests.

Sor. M.S

3 (2)

No.FOP/GFL/4480/861/60-61.

Office of the
Conservator of Forests,
Belgaum Circle.

Belgaum, 10th December, 1960.

To

The Chief Conservator of Forests
in Mysore, Bangalore.

Sir,

Subject:-Request for disforestment of lands granted on Inforest Settlement System out of Forest Sy.Nos.269 and 308 of Airani village, Taluka Ranebennur.

I am submitting herewith Divisional Forest Officer, Dharwar's No.FOP/GFL/AIRANI-60-61 dated 6th October, 1960, in duplicate, together with its enclosures and in view of the circumstances reported by the Divisional Forest Officer, in detail, I recommend that 10 acres from Sy.No.269 and 15 acres and 7 gunthas from S.No.308 from Airani village be disforested in favour of the applicants, for cultivation, as they have established cultivation thereon after spending considerable amount and by doing manual labour. These lands are at present held by them as 'Inforest' cultivation plots.

Yours faithfully,

D. Nanjundappa
9/12 (D.Nanjundappa)
Conservator of Forests,
Belgaum Circle.

5 (8)

To

LETTER.

The Conservator of Forests,
Belgaum Circle, Belgaum.

No.FDP/GFL/AIRANI of 60/61. Dharwar, 6 -12-1960.

Registered Parcel

Subject: Request for disforestment of lands granted on Inforest Settlement System out of Forest Sy.Nos.269 and 308 of Airani Village, Taluka Ranebennur.

In submitting herewith the two applications dated 28-8-1960 of Shriyuts Bettappa Fakirappa Giddappalavar and Bettappa Bangareppa Doddatammanavar both of Aremallapur Village, Taluka Ranebennur, I have to report as under.

2. The applicants in their applications request for granting the areas permanently after disforestment out of Forest Sy.Nos.269 and 308 of Airani Village, Taluka Ranebennur at present granted to them on Inforest Scheme Settlement Systems.

3. The areas of 10 Acres and 19 Acres 34 Gunthas out of Forest Sy.Nos. 269 and 308 of Airani Village respectively were formerly granted to the applicants on Agri-Silvi System for the period from 1951 to 1956. But since the Agri-Silvi System found to be unsuccessful, the new Inforest Settlement System has been introduced by Government for grant of the forest lands for cultivation. Accordingly the areas of 10 Acres and 19 Acres 34 Gunthas out of Forest Sy.No.269 and 308 of Airani Village respectively granted on Agri-Silvi System have been converted into Inforest Settlement System as shown below:-

Sl. No.	Sy.No. and Village.	Area	Authority.	Name of the Lessee.	Remarks.
1	2	3	4	5	6
		A. G.			
1.	269 of Airani.	10- 0	Conservator of Forests, B.C., Belgaum's No. 22/51/12822 of 17-12-1957.	Shri.Bettappa Fakirappa Gidda-ppalavar of Aremallapur.	
2.	308 of Airani.	15- 7	Government Order No.AFD-90-DST-58 of 22-12-1958.	Shri.Bettappa Bangareppa Doddatamma-nnavar of Aremallapur.	Out of 19 Acre 34 Gunthas for-merly granted on Agri-Silvi System an area of only 15 Ac 7 Gunthas has been granted on Inforest Settlement System in ord to restrict t economical ho lding of the lessee as pre-scribed by Government.

For the remaining area of 4 Acres 27 Gunthas (excluding the area of 15 Acres 7 Gunthas granted on Inforest Settlement System) out of Forest Sy.No.308 of Airani village, one Shri. Halappa Fakirappa Giddappalavar of Aremallapur village has applied for granting the area for cultivation. His request has been recommended for granting the area of 4 Acres 27 Gunthas on Inforest Settlement System under this office No. G/11/1324 of 19-12-1959 and Government Orders in question are awaited. Kindly vide your No.22/51(56-57)/3248 of 8-1-1960 in this connection.

4. Now the applicants request to disforest the areas in question and to grant the same for cultivation permanently. They, in their applications in question, state that they have invested their entire financial measure in order to bring the areas under cultivation for the period from 1951/ to 1960. They have also put their hard labour for the purpose, on account of which the areas in question are now become suitable for cultivation. Now they do not have any financial source to improve the areas further by undertaking the following measures:-

(a) To erect the bunds wherever necessary in order to stop soil erosion;

(b) To buy good quality of manure and use it for the fertilisation of the land;

(c) To undertake digging and weeding in order to fertile the areas;

(d) To dig up a well of drinking water, since the village Airani is 3 miles away from Aremallapur Village and hence the well is quite essential;

& (e) To erect sheds or huts for the accommodation of the cattle.

For the above improvements their applicants require a good amount of money. But since the areas have been granted to them on Inforest Settlement System, they are unable to raise loans on the areas or to mortgage the areas in order to get the financial help from the Co-op. Societies and Takavi for undertaking the improvements. If the areas have been granted to them permanently they can raise the loans on the areas or mortgage the same for the financial help and undertake necessary improvements for the areas in question. The applicants therefore, request to grant the areas to them on permanent basis after disforestment.

5. I have inspected the areas. The areas have become quite suitable for cultivation by the efforts of the grantees and areas will not be required by this Department for its activities in future. The applicants are cultivating the areas for the last 10 years and they have made the same quite suitable for cultivation after spending their entire financial treasure and their hard labour. The areas being flat there is no possibility of soil erosion.

(.....P3

6. In the circumstances reported above, I hereby recommend that the areas of 10 Acres and 15 Acres 7 Gunthas out of Forest Sy.Nos.269 and 308 of Airani village, Taluka Ranebennur may kindly be disforested and granted to the present lessees for cultivation on permanent basis.

respectively

7. . The Inforest Settlement Agreements Nos. 2 and 3 of Hirekerur Range along with necessary copies of the sketches are submitted herewith for favour of moving the Government for issuing necessary orders as requested in para No.6 above at an early date.

(K.M.SUBBAYYA)
Divisional Forest Officer,
Dharwar.

SAB/-.27-9.

Village: Airani 9 (11)

Taluka: Ranebennur

Dist: Dharwar.

Area granted 10 Acres

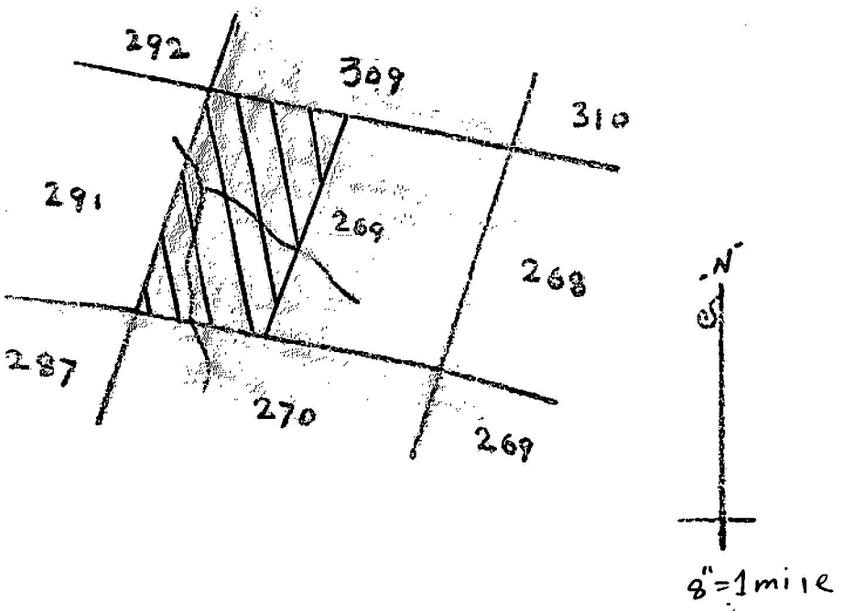

Reserved Forest in charge of F.D. ..

Area given out for cultivation .

Kalki land . . . . .

Forest Surveyor,
Dharwar Divn.

Divisional Forest Officer,
Dharwar

Village: Airani. (12)

Taluka: Ranebennur. 11

Dist: Dharwar

Area granted for cultivation. A 15 - G 7.

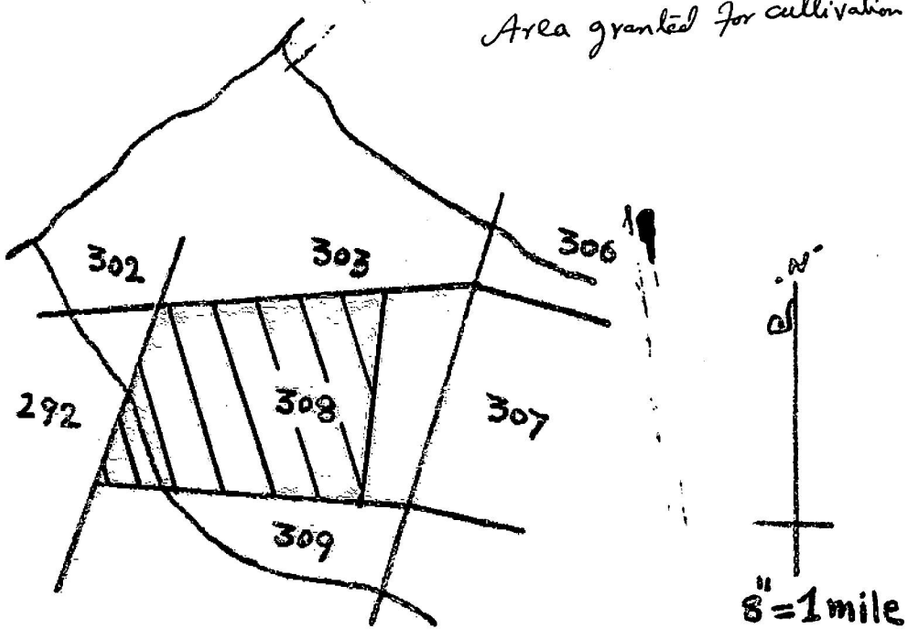

Forest area - - - - - - - -

" " granted for cultivation.

Malki land - - - - - - - -

Forest Surveyor,
Dharwar Divn.

Divisional Forest Officer,
Dharwar

ಹಿಂಸೆ ಗ್ರಾಮದಿಂದ ನಾವುಗರು 3 ಜಿಲ್ಲೆಗಳು ಹಂಚಿ-
ಹೋದ್ದಿದರಿಂದ ಇಲ್ಲಿ ಕಡಿಮೆಯಾಗಿ ನೀರಿನ ಭಾ-
ಲಂಬನ್ನು ಕಡಿಮೆ ಕೆಳಗಳ್ಳಬಹುದು. ಅಲ್ಲದೆ ಕೃಷಿ
ಪದಾರ್ಥಗಳಿಗೆ ಬೆಳೆದಲಾಗಿ ನೀರಿನ ಅವಶ್ಯಕತೆ
ಕ್ರಿ. ಬಹಳಷ್ಟಿ ಇದ್ದು, ಕಿಬ್ಬಲಿಂದ ಭಾಲಲಾಗಿ ಅವ-
ಶ್ಯಕತೆ ಬಹಳಷ್ಟಿ ಇದೆ.

VI) ಇಲ್ಲಿ ಬೆಳೆಸಿಗಳು ಕಾಲದಲ್ಲಿ ಪದಾರ್ಥಗಳನ್ನು
(ಉತ್ಪನ್ನಗಳನ್ನು) ಶೇಖರಿಸಲಿಕ್ಕಾಗಿ ಹಾಗೂ
ಬೆಳೆಸಿಂದಾದ ನಂತರ ಉಳಿದ ಬೆಳೆದಲಾದಲ್ಲಿ
ಗಳನ್ನು ರಕ್ಷಿಸಿ ಇಡಲಿದಲ್ಲಿಗಾಗಿ ಹಾಗೂ ಇಲ್ಲಿ
ಧಾನ್ಯಲಂತ (ಬೆಳೆಗಳು) ಸಂಂಸ್ಕರಣಾಗಾರಗಳಾಗಿ ಇಲ್ಲಿ
ಒಂದು ಆಗ್ರೋ ಆಧಾರಿತ ಕೈಗಾರಿಕೆಯನ್ನು
ಬೆಳೆಸಿಕೆಳಗಳ್ಳಬಹುದು ಅವಶ್ಯಕತೆಯಿದೆ.

ಮೇಲೆ ವಿವರಿಸಿದ ಬಲ್ಲ ಕಾರಣಗಳ ನಿಮಿತ್ತಗಳಿಂದ
ವಿವೇಚನೆ ಮಾಡಿ ಬಿಟ್ಟ ಬೆಳೆಸಬಹುದು ಅವಶ್ಯಕತೆ ಇದೆ ಹೀಗಿಲ್ಲದೆ
ಹೋದರೆ ಇದು ಬರಿಗೆ ಕ್ಷ ಬಲುಜಾಣರು ಮೇಲೆ
ನಾನು ವಿವರಿಸಿಲಾಗಿರುವ ಹಣ್ಣಾಲನ್ನು ಕ್ರಿ.ರಾಗಿ ಬೆಳಗಿಸಿಕೊಳ್ಳು-
ದು ಸಾಧ್ಯವಾಗದಿಲ್ಲ. ಇಲ್ಲಿ ಕಾರಣಾಂತರ ಬೆಳೆಸಿಲ್ಲದಿರುವ
ಬೆಳೆಸಿಂದಾದ ಅಭಿವೃದ್ಧಿಗಳು ಬೆಳೆಸಿಂದಾದ ನಿವಾರಣೆ ಬಲುಜಾಣ
ಸಂಂಸ್ಥೆಯನ್ನು ನಾವು "Co-operative Sosaitty" ಎಂದು
ಬರೆದು ಕೆಳಗಳ್ಳು ನಿಲುವುಗಳಿಂದ ಆಯಿಸಿದ ಕೆಳಗಳ್ಳು
ಹಾಗೂ ನಿವಾರಣೆ ಬಲುಜಾಣರನ್ನು ಬರೆದು ಕೆಳಗಳ್ಳು ನಿರ-
ಕ್ಷರಪಟ್ಟಿಯಲ್ಲಿರುವ "ಆಗ್ರೋಂಯು" ನಿಲುವು ಬೆಳೆದಲಾದಲ್ಲಿಗಾಗಿ
ಕ್ರಿ.ಸಿದ ಕೆಳಗಳ್ಳು, ನನಗೆ ಅನುಕೂಲವಾಗುವಂತೆ
ಕ್ರಿ.ಯನ್ನು ಮಾಡಿಕೊಡುವಂತೆ ನನಗೆ ಡಿನೆ ಫ್ಲಿಕರ್ಸ್ಟ್ ಬರೆದ ಕಾರ್ಯಾ
ಕ್ರಿ.ಶೀಲ ನಿಗಮ ಬರೆಯಲ್ಲಿಕ್ಕೆ ಕೆಳಗಳ್ಳಲ್ಲಿ ನನ್ನ ಬುದ್ಧಿಯಿಂದ
ಬಲುಜಾಣರನ್ನು ರಚಿಸಿ ಕೆಳಗಳ್ಳಲು ಒಳ್ಳೆಯ ಸಹಕಾರ
ಆಗಬಲ್ಲದು.

ಕಾರಣ ದಾಖಲೆಗಳನ್ನು ಕ್ಷ ಬೂಡಲ್ಪಡಿಸಿದ
ಬೇಡಿಕೆಗಳನ್ನು ಕ್ರಿ.ಬರಾದ ಬೆಳೆಸಿಂದಾದಲ್ಲಿ ಬರಿಸಿಕೊಡಿ,

(14)

[redacted] ಅಂತಹವರ ಬಗ್ಗೆ

"ಹಿಟ್ಟು ಹಾಕಿದ ಧಾನ್ಯ ಬಿಳಿಯುವಿ" ಎಂಬ ಚಲನಚಿತ್ರ

ದ ಅಂತಿಮವಾದ ಚಿತ್ರೀಕರಣವನ್ನು ಮಾಡಿಸಲು ನನಗೆ

ಕಾಲಾವಕಾಶವನ್ನು ಕೊಟ್ಟು ಸಹಕರಿಸಿದಕ್ಕಾಗಿ ನನ್ನ ಸಂಪೂರ್ಣ

ವಂದನೆಗಳು.

ತಮ್ಮ ವಿಶ್ವಾಸಿ

ಸಹಿ

ಹೆಬ್ಬೆರಳಿನ ಗುರುತು

ಮೇಲೆ ತಿಳಿಸಿದ ವ್ಯಕ್ತಿಯನ್ನು ನಾನು ಚೆನ್ನಾಗಿ ತಿಳಿದಿದ್ದೇನೆ.

ಇವರ ಬಗ್ಗೆ ನಾನು ಖಾತ್ರಿ ಕೊಡುತ್ತೇನೆ.

DIVISIONAL FOREST OFFICE
Regd. No. C/5304
Date 2-9-86

ಸಹಿ/- 2 NOV 1986

ಮೈಸೂರು ಡಿಸ್ಟ್ರಿಬ್ಯೂಟರ್ಸ್ ಪ್ರೈವೇಟ್ ಲಿಮಿಟೆಡ್ ಕಂಪನಿಯ
ಬರಲಾಗಿ ಧಾರವಾಡ ಇಲಾಖೆಯ ಪೊಲೀಸರಿಗೆ.

ವಿಷಯ:— ಶ್ರೀಯುತ ಬಿನ್ನಾರ ಅಲಿಯಾಸ್ ವೈಕ ಪ್ರಕರಣ
ಗಾಯಬಾಗಿದ್ದ ಫಿರ್ಯಾದಿ ಸಂ. ೧೧೦ 207
ತಾರೀಖು - ಗಂಟೆ
ಗಂ - ಲ ಅಕ್ಷರದ ಸಂಬಂಧವಾಗಿ.....

ಅರ್ಜಿದಾರ:- ಚೆಟ್ಟಿಯಾರ್ ಫೈನಾನ್ಸ್ ಸಿಬ್ಬಂದಿಯಾಗಿ. ನಾನು
ಕೆಲಸಮಾಡ್ತಾಯಿರ. ಆಗು ಹೋಗಿಬಿನ್ನಾರ ಕ್ಯ ಕೆಳಗಿ ಕೆಲಸ-
ನಿರಂತರ ಅಂತಾ ಬಡಿ ತೆಗಸ್ಕ ಬಂದು ನಿಲ್ತಿದ್ದಾನೆ.

1ನೇ ಬಿಳಿಲ್ಯಾಂಡಿನಿಂದ ಫ್ಲಾರಿನಲ್ಲಿ ಸಲಿಲ್ ನಂಬರು
ನನಗೆ ಲಗ್ಗಿ ಸಿಕ್ಕಿ ಪ್ರಕಾರ ಆಗು ೪೨-೭-
ಸಾಮಾನ್ಯಕ್ಕೆ ಸಾಗಿಸಿ ಕೆಲಸ ಮಾಡುವುದು ಇದ್ದು,
ಯಾಂಬೆ ಇದಕ್ಕೆ ಸಲಿಲ್ ನಂಬರು ನನಗೆ
ಇತ್ತೀಚೆಗೆ ಒಂದರಿ ಆಗು ೧೭- ೧- ಸಾಮಾನ್ಯಕ್ಕೆ
ಇನ್ನೊ ಫ್ಲಾರಿನಲ್ಲಿ ಸೇರ್ಸಿ ಲೋಂಬ ಪ್ರಕಾರ ಸಾಗಿ-
ಸಿ ಕೆಲಸ ಮಾಡಿದ್ದು ಇದ್ದು ನಿದ-
ಕ ಸಲಿಲ್ ನಂಬರುಗಳಿಲ್ಲಾಂದು ಅಲ್ಲಾಳಿಸಿ
ಸಾಗಿಸಿಕೊಟ್ಟ ಅಂತ ಲಗ್ಗೆರಿ ಮಾಡಿ ಆಲ್ಲಾ
ಹೀಗೆ-ಅಲ್ಲಾಳಿಸಿ ನಿದರ ಸಾಗಿಸಿಕೊಟ್ಟನ್ನು ಅಲ್ಲಾ-
ಳ್ಳಾ ಮಾಡಿದ್ದಾ ಅದೆ ರೀತಿ ಅಲ್ಲಾಳಿಸಿ ಅಲ್ಲಾಳಿ-
ಸಿದರ ನಿದರ ಅಲ್ಲಾಳಿಸಿ ಸಾಗಿಸಿಕೊಟ್ಟನ್ನು
ಕೊಡಿದೆ ಒಪ್ಪಿದರುತ್ತಾರೆ. ಈಗ ನಿನ್ನೆಲ್ಲಾ
ಅಲ್ಲಾಳಿಸಿ ಸಾಗಿಸಿಕೊಟ್ಟ ಲಿರುವುದಿಲ್ಲ.

ನಿದರಿ ಸಲಿಲ್ ನಂಬರಿನಲ್ಲಿ ನಾನು
ಸಾಗಿಸಿಕೊಟ್ಟ ಗಂಟೆಗಳನ್ನು, ಬುಕ್ಕಿಂಗ್ ಆಫೀಸಿನಲ್ಲಿ ಲೆಕ್ಕಿಸಲಾಗಿದ
ಲಗ್ಗೆಗಳನ್ನು ಆ ಅಂಶದ ಆಫೀಸರು ನಿಗಾ
ಇರಿಸಿರುವ ಸೆಕ್ಯೂರಿಟಿಗೆ ಆರ್. ಚೆಲುವರಾಜ

ನಷ್ಟ ಕೆಟ್ಟಂತ ಪೈರಿಂಗ- (ತಲುಬಲ್ಲದೆ ನನ್ನಲ್ಲಿ-
ದ್ದು ಬಲ್ಲ ಶಿಕ್ಷಿಣ- ಬಲವನ್ನು ಬಳಿಗಿ ಬಿಟ್ಟಿದ್ದೇ-
ನೆ ಅಂದರೆ ಇಂಟಿಡ ಶಿಕ್ಷಿಣ- ಬುಂಗ್ಗಟ್ಟಿನ
ಪ್ರಿನಂಗಬಲ್ಲಂಬ್ಲು ನಾನು ಒಂದು ನೀಲಿಂಗ
ರಚಿಂಬುಗಳನ್ನು ಬಿಸಿಂಗಿಲಿಗಿಸಿದ್ದೇನೆ.

3) ಈ ಬಲುಬಾಂಬಲ್ಲು ಕ್ಷಗ ಅಂಗೀಲನ್ಯ
ಬಳಿಗಿಬುನ್ನು ಅಂದರೆ ನೀಲಿಷ್ಟು ಬಿಸಿಲು
ದಿಂದಲಿನ ಬೆಲಾದರೆ ಶಿಥುನಿಲಿ ಬೆಳ್ಳಲುಲಿಲಿನ
(ಬೆಲಿನಿಂಬ್ಲಾದ ಆಲ್ಟ್ರಗಳೀಗನುನೆಂಲಿ ಚಿಲಿಬುಲಿಟಿಲಿ
ಗಳನ್ನು ಕೈ ಕೆಗಳ್ಳುಲ್ಲಬ್ರದು ಅಬುಶ್ಯಲಿದೆ.

ಬೀಳಿಗಾನ್ಯ ಬಿಳ್ಳಲುಲಿಲಿನ ಶೆಲಿಂಬುಗಳನ್ನು
(ತಲುಬಗಳನ್ನು ಕೈ ಕೆಗಳ್ಳುಲಿ ಶಿಷ್ಟುಲಿಚಿಲುಬುಬಿದರಿಗ
ಬಲುಬಾಂಬಲ್ಲು ಪಾಗಬುಲಿಳಿ ಬ್ಯಾಡಿದುದ ಶಿಂಗನ್ನು
ಇದಳ್ಳಿಗಿಂಲಿಂದ ನನ್ನಲ್ಲಿಲ್ಲದಿ ಬುಲ್ಲ ಹಣಲ್ಲು
ತಿಂಲಿ ಹೊಂಗಿ. ಇದೀಗ ನನ್ನ ~~ಶಿಕ್ಷಿಣ~~ ಶಿಕ್ಷಿಣ-ಶಕ್ತಿ
ಶುಂಠಿಲಿಚಿಲುಬ್ಲಾಗಿದೆ. ಇಂದ್ದಿಂದ ದಿರಿಸಿಲಿಲಿಚಿಲಿಂಬುಲ್ಲು
ಹೊಗಿಂದ ಹಣಲಬನ್ನು ಬಿಸಿಂಲಿಂಗಿಂಗಿಂಗಿ ಬೀಗಬುಲಿಳಿ
ಶಿಂಬುಗಳನ್ನು ಕೈ ಕೆಗಳ್ಳುಲ್ಲಬ್ರದು ಅನಿಷ್ಟಲಿಲಿ
ಗಿದೆ.

3) ಕ್ಷಗ ಬ್ಯಾಡ ಬೀಳಿಗಾದ ಶಿಂಬುಗಳ ಬುಬುಶ
ಶಿಳ್ಳಿಗಾನಂಲಿಚಿಲುಬೆ.

I) ನೆಳ್ಳುರ (ಬಿಂಬಿಲಿಳಿ) ಬೆಂದಬುಗಾದಲ್ಲುಗಳನ್ನು ಶಿಂಡುಡಾಡಬೇಬುದು.

II) ಬಿಡ್ಡು ಹಾಗಿಬೇಲ್ಲಬ್ರದು. (ಅಬುಶ್ಯಲಿದಲ್ಲಿಲ್ಲಿ)

III) ತೆಳಿಲ್ಲು ಕಡಿ ಶಿಲ್ಲಿನ ಬಿಡ್ಡು ಗಳನ್ನು ಶಿಟ್ಟು-
ಬ್ಲಬ್ರು. ಇದು ಬುಲ್ಲಿನ ಹಬುಶಳಿಲಿಬುನ್ನು ಆಡಿಗ-
ಟ್ಟುಲಿಬ ಬಾಗ್ಗೆ.

IV) ನಟ್ಟು ಕಡಿಗಿಬೇಲ್ಲಬ್ರದು. (ಅಂದರೆ ಇದರಿಂದ
ಬ್ಲ
ಹೊಲಿದ ಬುಲ್ಲಿದನೆ ಹಿಡಿಲ್ಲಿಬುತ್ತದೆ.)

~~VI~~ V) ನಿವರಿ ಹಬುಶ್ಯ ನಂಬರು ಕಿಂಲಿಲ್ಲಿಬುಲ್ಲಾಲ್ಲಿರ-

(VI)

Co-operative Society

(18)

ತಾಲ್ಲೂಕು

* ಬಿಡ್ಡುದಾರರು ಬಂದಾರಿಸ್ತೆ ದುಡ್ಡಾಲಯಸ್ಥರವರ

ಮೇಲ್ಕಂಡ ವಿಷಯ: ಮಿಂಚಂಚೆ ಉದ್ಯೋಗಿಗಳ ಹಿರಿಯಧಿಕಾರಿಗಳ

ಗಮನಕ್ಕಾಗಿ ವಿನಂತಿ.

DIVISIONAL FOREST OFFICE
No. C/5303
2-9-60

31 AUG 1960

(3)

(I)

(II)

(III)

(IV)

(V) →

(21) 21

Appendix F. G. — 1]

SUBJECT.....

.....

.....

Diary No. of letter replied to .....

Section

File No.

Mysore Government Secretariat.

Serial No.

( )

the 195 .

No. RD 26 LBM 61

Date of issue..... Issued

To

The Dy. Comm.,
Dharwar Dist: Dharwar.

Signed by.....

Sir,

Sub:- Request for disposal of Lands granted on Forest Settlement system out of R.S.No. 269 & 308 of Aiyaur Village, Tal. Ranebennur.

I am directed to forward herewith a copy of letter No. B3-414-1775/6061 dt. 16-2-1961 ~~from~~ together with its enclosures received from the C.C.F. on the above subject for your early remarks in the matter.

List of enclosures ..... 1+3 to be typed.

Copied by.....

Examined by .....

Yrs.

Yrs RD

25/2/61 28/2/61

WD 04696—GPB—PZS—8 00 000—22-3-60

(22) 43

GOVERNMENT OF MYSORE

28

No RD 4 LBM 61

MYSORE GOVERNMENT SECRETARIAT,
VIDHANA SOUDHA,

Dated, Bangalore, 6rd March 1961.
15 Saka ERA 1882

FROM

The *Secretary to the Government of Mysore,*
Revenue Department.

To

The Deputy Commissioner,
Dharwar District, Dharwar.

Sir,

Sub:-Request for disforestment of Lands granted on Inforest Settlement System out of F.S.No.269 & 308 of Airani Village, Taluka Ranebennur.

I am directed to forward herewith a copy of letter No.B3-414-1775/60-61 dated 14-2-1961 together with its enclosures received from the Chief Conservator of Forests on the above subject for your early remarks in the matter.

Yours faithfully,

(M. Venkatagiri Raju)
Under Secretary to Government,
Revenue Department.

hvr/

(25) 25

Copy of the letter No.B3-414-1775/60-61 dated 14-2-61 from the Chief Conservator of Forests to the Secretary to Government, Revenue Department Bangalore.

=====

Sub:- Request for disforestment of lands granted on Inforest Settlement System out of Forest S.Nos.269 and 308 of Airani village, Taluka Ranebennur.

===

I enclose a copy of letter No.FOP/GFL/4480/861/60-61 dated 10-12-1960 from the Conservator of Forests, Belgaum along with the connected papers on the above subject for perusal.

An extent of 10 acres in S.No. 269 and 15 acres 7 guntas in S.No.308 of Airani village have been granted on Inforest Settlement to Sri Bettappa Fakirappa Giddappalavar and Sri Bettappa Bangarappa Doddatammannavar respectfvely. Now the applicants request to disforest the areas and to grant the same for cultivation permanently. In this connection they have stated that they have invested their entire amount to bring the areas under cultivation and that they want to further improve the lands by digging well for drinking water, to erect sheds for the accommodation of the cattle etc. They have further stated that they can raise loans for these purpose only if the lands are granted on a permanent basis. The Divisional Forest Officer, Dharwar has stated that the areas have become quite suitable for cultivation by the efforts of the grantees and will not be required by the Forest Department for its activities in future. Inthe circumstances and also in view of the fact that the areas are adjacent to the Malki lands, I have no objection to disforest these areas as a special case.

Orders of Government may kindly be issued early.

The connected papers may kindly be returned when done with.

==========

'Copy'

hvr/

(24)

25

Copy of the letter No.FOP/GFL/4480/861/60-61 dated 10-12-60 from the Conservator of Forests, Belgaum Circle to the Chief Conservator of Forests in Mysore Bangalore.

===

Sub:-Request for disforestment of lands granted on Inforest Settlement system out of Forest S.Nos 269 and 308 of Airani village, Taluka Ranebennur.

===

I am submitting herewith Divisional Forest Officer, Dharwar's No.FOP/GFL/AIRANI-60-61 dated 6th October, 1960, in duplicate, together with its enclosures and in view of the circumstances reported by the Divisional Forest Officer, in detail, I recommend that 10 acres from S.No.260 and 15 acres and 7 guntas from S.No.308 from Airani village be disforested in favour of the applicants, for cultivation, as they have established cultivation thereon after spending considerable amount and by doing manual labour. These lands are at present held by them as 'Inforest" cultivation plots.

=========

'Copy'

hvr/

(2)

29

Copy of the letter No.FOP/GFL/AIRANI of 60/61 dated 6-10-60 from the Conservator of Forests Belgaum Circle, Belgaum.

Subject:- Request for disforestment of lands granted on Inforest Settlement system out of Forest S.Nos 269 and 308 of Airani Village, Taluka Ranebennur.

In submitting herewith the two applications dated 28-8-1960 of Shriyuts Bettappa Fakirappa Giddappalavar and Bettappa Bangarappa Doddatammanavar both of Aremallapur Village, Taluka Ranebennur, I have to report as under.

2. The applicants in their applications request for granting the areas permanently after disforestment out of Forest S.Nos 269 and 308 of Airani Village, Taluka Renebennur at present granted to them on Inforest Settlement systems.

3. The areas of 10 acres and 19 acres 34 guntas out of Forest S.Nos 269 and 308 of Airani Village respectively were formerly granted to the applicants on Agri-Silvi System for the period from 1951 to 1956, But since the Agri Silvi system found to be unseccessful the new Inforest Settlement system has been introduced by Government for grant of the forest lands for cultivation. Accordingly the areas of 10 acres and 19 acres 34 guntas out of Forest S.Nos.269 and 308 of Airani Village respectively granted on Agri-Silvi System have been converted into Inforest Settlement System as shown below:-

Sl. No.	Sy.No.and Village.	Area	Authority.	Name of the Lessee.	Remarks
1	2	3	4	5	6
1.	269 of Airani	A-G 10-0	Conservator of Forests, B.C., Belgaum's No. 22/51/12622 of 17-12-1957.	Shri Bettappa Fakirappa Fidda-ppalavar of Aremallapur.	
2.	308 of Airani	15-0	Government Order No.AFD-90-DST-58 of 22-12-1958.	Shri Bettappa Bangarappa Doddatamma-nnavar of Aremallapur.	Out of 19.acres 34 guntas formerly granted on Agri-Silvi System an area of only 15 acres 7 guntas has been granted on Inforest Settle-ment system in order to restrict the economical holding of the lessee as prescribed by Government)

P.T.O.

For the remaining are of 4 Acres 27 Guntas (Excluding the area of 15 ~~guntas~~ acres 7 guntas granted on Inforest Settlement system) Out of Forest S.No.308 of Airani Village, one Shri Halappa Fakirappa Giddappalavar of Aremallapur village has applied for granting the area for cultivation. His ~~Majesty~~ request has been recommended for granting the area of 4 acres 27 guntas on Inforest Settlement system under this office No.G/11/1324 of 19-12-1959 and Government Orders in question are awaited. Kindly vide your No.22/51(56-57)/3248 of 8-1-60 in this connection.

4. Now the applicants request disforest the areas in question and to grant the same for cultivation permanently. They, in their applications in question, state that they have invested their entire financial measure in order to bring the areas under cultivation for the period from 1951/to 1960. They have also put their hard labour for the purpose, on account of ~~wx~~ which the areas in question are now become suitable for cultivation. Now they do not have any financial source to improve the areas further by undertaking the following measures:-

(a) To erect the bunds wherever necessary in order to stop soil erosion;

(b) To buy good quality of manure and use it for the fertilisation of the land;

(c) To undertake digging and weeding in order to fertile the areas;

(d) To dig up a well of drinking water, since the village Airani is 3 miles away from Aremallapur village and ~~xkxxx~~ hence the well is quite essential;

(e) To errect sheds or huts for the accommodation of the cattle.

For the above improvements the applicants require a good amount of money. But since the areas have been granted to them on Inforest Settlement System, they are unable to raise loans on the areas or to mortgage the areas in order to get the financial help from the Co-Op.Societies and Takavi for undertaking the improvements. If the areas have been granted to them permanently they can raise the loans on the areas or mortgage the same for the financial help and undertake necessary improvements for the areas in question The applicants therefore, request to grant the areas to them on permanent basis after disforestment.

5. I have inspected the areas. The areas have become quite suitable for cultivation by the efforts of the grantees and areas will not be required by this Department for its activities in ~~fxxx~~ future. The applicants are cultivating the areas for the last 10 years and they have made the same quite suitable for cultivation after spending their entire financial treasure and their hard labour. The areas being flat there is no possibility of soil erosion.

6. In the circumstances reported above, I hereby recommend that the areas of 10 acres and 15 acres 7 Guntas out of Forest S.Nos 269 and 308 of Airani village, Taluka ~~Rx~~ Ranebennur may kindly be disforested and granted to the present lessees for cultivation on permanent basis.

7. The Inforest Settlement Agreements Nos. 2 and 3 of Hirekarur Range along with necessary copies of the sketches are submitted herewith for favour of moving the Government for issuing necessary orders as requeste in para No.6 above at an early date.

==========

'Copy'

hvr/

(27) 31

M.Venkatagiri Raju, B.A.,
Under Secretary to Government,
Revenue Department.

Vidhana Soudha,
Bangalore,
D/5-2-1962

D.O.No.RD 28 LBM 61

Dear Sir,

Would you kindly refer to this office letter of even number dated the 6th March1961 and subsequent reminders dated the 24th Oct. 1961 and 20th December 1961 regarding disforestment of lands granted on in forest settlement system out of F.S.No.269 and 308 of Airani village, Ranebennur taluk.

As no reply has so far been received and as the matter is pending since long, I am to request you kindly to look into the matter and forward your final report immediately.

Yours sincerely,

Issued

Shri A.M.Shaikh,
Deputy Commissioner,
Belgaum District.

33

GOVERNMENT OF MYSORE.

Mysore Government Secretariat,
Revenue Department, Bangalore.
Dated the 1962.

D.O.No.RD 28 LBM 61

Dear Sir,

Would you kindly refer to this Office letter of even number dated the 6th March 1961 and subsequent reminders dated the 24th Oct. 1961 & 20th Dec. 1961 regarding disforestment of lands granted on inforest Settlement System out of F.S.No. 269 & 308 of Hirani Village, Ranebennur Tal.

As no reply has so far been received and as the matter is pending ~~for~~ Since long ~~years~~, I am to request you kindly to look into the matter and forward your final report immediately.

Yours sincerely,

12/5/2

~~To~~

Shri. A.M. Shaikh,
Deputy Commissioner/Divisional Commissioner,
Belgaum District/~~Division~~.

Issued
A 6/2

(29) 35

Shri A.M. Shaikh,
Dy. Commissioner,
Belgaum.

D.O.No.RB/FOR-1853
Office of the Dy. Commissioner,
Belgaum, dated 16th Feb. 1962.

Dear Shri Raju,

Sub:- Lands out of forest S.Nos. 269 and 308 of Airani Village, Taluka Ranebennur, - Disforestment of....

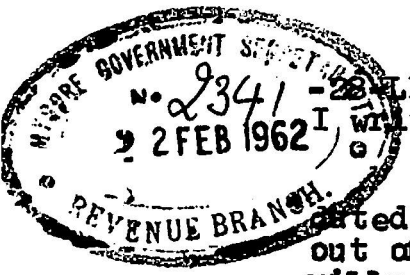

With reference to your D.O.letter No. RD-28-LBM-61 dated 5/6- 2-1962 on the above subject, I write to state as under.

2. Government letter No. RD-28-LBM-61 dated 6- 3-61 pertains to disforestment of lands out of forest S.Nos. 269 and 308 of Airani village in Ranebennur Taluk which is in Dharwar district. The Deputy Commissioner Dharwar may therefore please be referred to in the matter. I am sending a copy of your D.O.letter under reference to him for necessary action.

XXX

22/2

XXX

MLR

21/2

Yours

(A.M.Shaikh.)

Shri M.Venkatagiri Raju, I
Under Secretary to Govt,
Revenue Department,
Bangalore.

(20)

Appendix F. G. -1]

37

SUBJECT.....

.....

.....

Diary No. of letter replied to .....

Section

File No.

Serial No.

Mysore Government Secretariat.

( )

the 195 . .

No. RD. 28. CBM 61

To

Date of issue.....

Signed by.....

Dear Sir,

Would you kindly refer to this office letter of even no. dt. the 6th March 1961 and subsequent reminders dt the 26th oct. 1961 & the 20th Dec. 1961 Reg. disforestment of lands granted on in-Forest system out of S.No. 269 & 308 of Hirani Village, Ranebennur Taluk?

As no reply has so far been received and as the matter is pending since long, I am to request you kindly to look into

List of enclosures .....

Copied by.....

Examined by .....

WD 61696- GPB- PZS- 300,000—22-3-60

(31)

the matter and forward your final report immediately

J.S.
26/2/62
U.S.R.D

Shri. G. H. Adirajaiah
D.C. Dharwar

27/2/62

39 (32)

M.VENKATAGIRI RAJU, B.A.,
Under Secretary to Government,
Revenue Department.

Vidhana Soudha,
Bangalore.
Dated the 28th Feb.1962.

D.O.No.RD 28 LBM 61

Dear Sir,

Would you kindly refer to this Office letter of even number dated the 6th March 1961 and subsequent reminders dated the 24th October 1961 and the 20th December 1961 regarding disforestment of lands granted on in-forest system out of S.No.269 and 308 of Airani Village, Ranebennur Taluk?

As no reply has so far been received and as the matter is pending since long, I am to request you kindly to look into the matter and forward your final report immediately.

Yours sincerely,

Shri G.H.Adirajaiah,
Deputy Commissioner,
Dharwar District,
DHARWAR.

lsd.

40 (33)

GOVERNMENT OF MYSORE

M. Venkatagiriraju, B.A.,
Under Secretary to Government,
Revenue Department.

Mysore Government Sectt.,
Revenue Department
Dated, Bangalore, 13-4-1962.
Chaitra 23, Saka ~~Era~~, 1884.

D.O.No. RD 28 LBM 61.

Dear Sir,

Subject:-

Would you kindly refer to this Department's letter of even number dated the 1-3-1962 regarding disforestment of lands granted on inforest ~~tax~~ System out of S.No.269 and 308 of Airani Village, Ranebennur Taluk?

As no reply has so far been received, I am to request you kindly ~~now~~ look into the matter and send an early report to Government.

Yours sincerely,

Issued
R/- n/H

Sri
Deputy Commissioner,
Dharwar District,
D H A R W A R.

R/-.

u/ (34)

GOVERNMENT OF MYSORE.

M.Venkatagiri Raju,B.A.
Under Secretary to Government,
Revenue Department.

Vidhana Soudha,
Bangalore-1,
Dated 1962.

D.O.No.RD. 28 LBM 61

Dear Sir/~~Shri~~....

Would you kindly refer to this department's letter of even no. dated the 6.3.62..... ~~and subsequent reminders dated the~~..... ~~and your reply thereto bearing no~~..... ~~dated, the~~.....regarding. ~~disposal~~ ~~of~~ lands granted on inforest System out of S.No.269 & 308 of Adami Village, Ranebennur Tal?

As no reply has so far been received ~~and as the matter is pending for nearly/over.....months/years~~ I am to request you kindly to look into the matter and send an early report to Government.

Yours sincerely,

12/4

Sri
Dy.Commr/~~Dl.~~Commr. Dharwar/~~Dl.~~ Dist
.....

*Krishnan).
26.3.1962.

Issued
RS
11/4

42

(114) 33

Subject:- Disforestment of lands granted on Inforest settlement system out of Forest S.Nos. 269 and 308 of Airani- Taluka Ranebennur

....

No. FORSR 638
Dharwar, 15 -3-1962.

To,

The Secretary to Government,
Revenue Department,
Bangalore.

Ref: Your letter No. RD 23 LEM 61 dated 8- 3-1961.

Sir,

In submitting herewith the papers of the case, ending with Asstt:Commissioner, Haveri Dn., Haveri's No. FORSR-54 dated 11-12-1961, I have to state as under:

Under the inforest settlement system, an area measuring 10 acres in S.No. 269 and 15 acres 7 gunthas in S.No. 308 of Airani village, taluka Ranebennur has been granted to Shri Bettappa Fakirappa Giddapalavar and Bettappa Bangarappa Doddtammanavar respectively for cultivation, by the Forest Department. Now the applicants request to disforest the above said area and to grant the same for cultivation permanently.

FOR-SR-1192

The Asstt:Commissioner, Haveri Dn., Haveri reports after enquiry that the grazing area of the village is adequate and the area to be disforested is already held by the respective lessees since long. The villagers of Airani have no objection to grant the area to the applicants. The District Forest Officer, Conservator of Forests, and the Chief Conservator of Forests have also given their consent to disforest the area already held by the applicants.

In view of the facts stated above, there appears no objection to disforest the area, to the

(p.t.o).

4 C. Cleng. (36)

extent already granted to the applicants out of S.No. 269 and 308 of Airani.

....

Yours faithfully,

o.c. signed by
the Dy. Commr.

for Dy. Commissioner, Dharwar

Submitted through the Divisional Commissioner, Belgaum.

...

No.FOR.SR.1192
Belgaum, 11-4-1962.

Submitted to the Government in Revenue Department, Bangalore agreeing with the Deputy Commissioner, Dharwar.

11.4.62

(M. Vasudeva Rao)
Divisional Commissioner,
Belgaum.

11/4

Office of the Registrar R.D. Dated 16 APR 1962 1886

MYSORE GOVERNMENT SECRETARIAT No. 3521 17 APR 1962 REVENUE BRANCH.

17/4

MCR

17/4

US — (37)

Appendix F. G.—1]

SUBJECT.....

.....

.....

Diary No. of letter replied to .....

Section

File No.

Serial No.

Mysore Government Secretariat.

( )

the 195 .

No. RD·28·LBM·62

To

The Dnl. Commr,
Belgaum Dn. Belgaum.

Date of issue..... Issued Rd 26/4.

Sir,

Signed by.....

Sub:- (a·m P·1/c).

With Reference to your Endt.

No. FOR:SR·1192 dt the 15th April 1962 on the above subject, I am directed to return herewith the connected records after perusal.

List of enclosures .....

Copied by.....

Examined by .....

YT 23/4
US RD 28/4/62
4/4/62

47 (38)

GOVERNMENT OF MYSORE

No RD 28 LBM 62.

O/R.

MYSORE GOVERNMENT SECRETARIAT,
VIDHANA SOUDHA,

Dated, Bangalore,. 26.-4-...1962..

FROM

The *Secretary to the Government of Mysore,*
Revenue Department.

To

The Divisional Commissioner,
Belgaum Division,
Belgaum.

Sir,

Subject:- Request for disforestment of lands granted on Inforest Settlement System out of Forest Sy.Nos.269 and 308 of Airani Village, Taluka Ranebennur.

With reference to your Endorsement No.FOR.SR.1192, dated the 11th April 1962 on the above subject, I am directed to return herewith the connected records after perusal.

Issued
RS
26/4.

Yours faithfully,

(M.VENKATAGIRI RAJU),
Under Secretary to Government,
Revenue Department.

K*/23/4.

M. G. S. App. F VI—G. 2]

SUBJECT Disn of land Release of an area of 10 Acres in S.No. 269 2 15-7-0 in S.No: 308 of Airani village, Ranebennur Tq., — Register of Sr. Register of —

Diary No. of letter replied to.....

Mysore Government Secretariat

( )

the 195 .

Date of issue.....195 .

Signed by.....

May this be—

(i) printed?
(ii) treated as a Standing Order?
(iii) published in the Gazette, English Part?
(iv) translated?
(v) placed at the disposal of the Press?
(vi) published in the Gazette, Kannada Part?

Section

Serial No.

File No.

Proceedings of the Government of Mysore

Read 1) Letter no. Bg-414-1775/60-61 dtd 14-2-61 of the ccf

2) Letter no. EOR-SR-638 of 15/3/62 of the DC, Dharwar

3) no. EOR-SR-1192 dtd 14-4-62 of DC/Dhwr

Order thereon.—No. AED 18 EAF 61

order

The ccf has stated that an extent of 10 Acres i.e. 15-7-0 in So. 308

of Airani village, Rane-
bennur Tq have
been granted as
Inferior Settlement plot
to Sri Bettappa Fakirappa
Hiddappalavar & Sri
Bettappa Bangarappa
Doddatammannavar
reply. Now the Applicants
request to disforest the
areas & to grant the
same for cultivation
permanently. Applicants
have also stated
that they have incurred
their entire amount to
bring the land under
cultivation & they
want to improve

List of Enclosures.

Copied by

Examined by

WD 0259—GPB—P.Z.S.—1,00,000—23-2-56

After careful
consideration, Govt are
pleased to order
the release of an
area of 10 Acres
in S.No. 269 of
15 A 6 A 0 in S.No. 308
of Airani village,
Ranebennur Tq, Dharwar Dt
~~N.K. Dt~~, in favour
of ~~Sri Bangarappa~~
~~and~~ Sri. Bettappa
Fakirappa Giddappalavar
& Sri. Bettappa Bangarappa
Doddatammannavar
reply permanently
on a Special case
in view of the recommenda-
tion of the DC.

List of Enclosures.

Copied by

Examined by

WD 0259—GPB—P.Z.S.—1,00,000—23-2-56

(42)

M. G. S. App. F VI—G. 2]

SUBJECT.....

.....

.....

Diary No. of letter replied to.....

Section

Serial No.

File No.

Mysore Government Secretariat

( )

the 195 .

Proceedings of the Government of Mysore

Date of issue.....195 .

Signed by.....

May this be—

(i) printed?
(ii) treated as a Standing Order?
(iii) published in the Gazette, English Part?
(iv) translated?
(v) placed at the disposal of the Press?
(vi) published in the Gazette, Kannada Part?

~~Read~~ land further by digging wells for drinking water ~~to~~ erecting sheds for the accommo- ~~Order thereon. No.~~ of the Cattle, etc, In view of this, C.F has no objection to grant the area to the Applicants as a Special case.

The DC, Chairman & Addl Comr, Belgm have no objection for the release vide R(1) & (2) above)

(43)

M. G. S. App. F VI—G. 2]

SUBJECT.....

.....

.....

Diary No. of letter replied to.....

Mysore Government Secretariat

( )

the 195 .

Date of issue.....195 .

Signed by.....

May this be—

(i) printed?
(ii) treated as a Standing Order?
(iii) published in the Gazette, English Part?
(iv) translated?
(v) placed at the disposal of the Press?
(vi) published in the Gazette, Kannada Part?

Section

Serial No.

File No.

Proceedings of the Government of Mysore

Read— The area is surrendered to R.D for being granted to the Applicants with the usual ~~Order thereon~~ No. 1 Cond^ns as in vogue in R.D. Before the area is actually handed over to R.D the Malki, if any, on the land should be disposed of

(44)

by the Forest Deptt.

The ~~Govt~~ of

is ~~re~~ directed to

take further action

in the matter & submit

~~the~~ proposals for

publication in the

Mysore Gazette

B.O. ~~Govt~~

W

Q/S A 7 7

To

~~Secy~~ (with records)

Dept Comr, Belgm

DC, R-K Dr

C.F., Belgm

RO

Log

OR

2/5/62

List of Enclosures.

Copied by

Examined by

WD 0259—GPB—P.Z.S.—1,00,000—23-2-56